CONES WITH FIXATION FLANGE

DESCRIPTION

The cones with fixation flange from AMC-Mecanocaucho® work the elastomer at shear compression. They are comprised of a high strength external metal armour and a conical internal that is placed concentrically.

TECHNICAL CHARACTERISTICS

The cones with fixation flange from AMC-Mecanocaucho® are conceived to offer predominant axial elasticity under heavy loads. The used elastomer is a low dynamic rigidification elastomer, which makes it possible to obtain low natural frequencies thus maintaining excellent stability of the suspended unit.

The mount's radial stiffness is superior to the axial. This is particularly interesting for applications where great horizontal stability needs to be maintained.

The AMC-Mecanocaucho® Cone 100 mount is supplied with a height adjuster. This makes it possible to easily align transmission shafts without having to use additional accessories to do so.

All the models also incorporate an interlocking metal part that allow them to act as a FAILSAFE system. Thanks to this, and to the ruggedness of the metal parts, this mount is suitable for applications where the suspended unit is submitted to great shocks.

APPLICATIONS

The AMC-Mecanocaucho® cones with fixation flange have been designed specially for use in engines and auxiliary machinery for static applications and for applications in all kinds of vehicles.

CONE TYPE 50

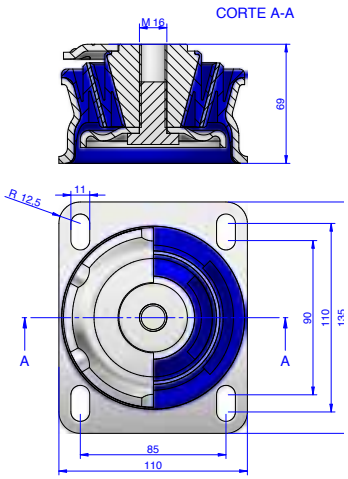

CONE TYPE 51

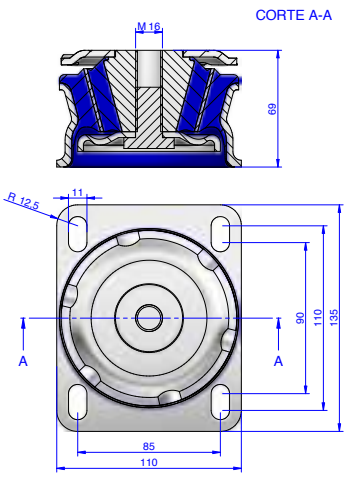

CONE TYPE 100

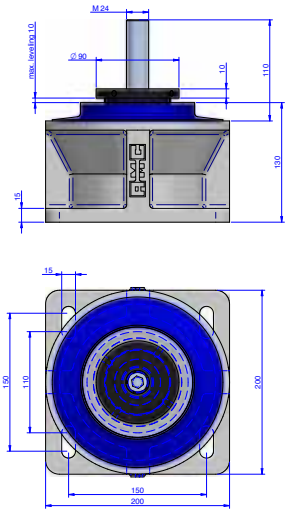

* In order to adapt its products to the state of the art, AMC .A. reserves the right to modify the conception and manufacture of the materials presented in this catalogue without prior notice

CONES

TYPE	CODE				WEIGHT(GR)
	40 Sh	50 Sh	60 Sh	70 Sh	
Cone 50	137085 120 Kg	137086 170 Kg	137087 250 Kg	137088 300 Kg	1600
Cone 51	137095 150 Kg	137096 220 Kg	137097 320 Kg	137098 420 Kg	1750
Cone 100	C137152 1600 Kg	B137157 2300 Kg	A137165 3750 Kg		9626

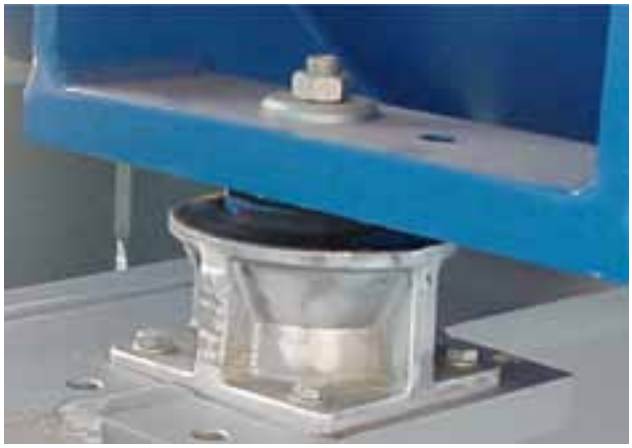

DYNAMIC CONE

AMC NATURAL FREQUENCIES
MECANOCAUCHO® CONE TYPE

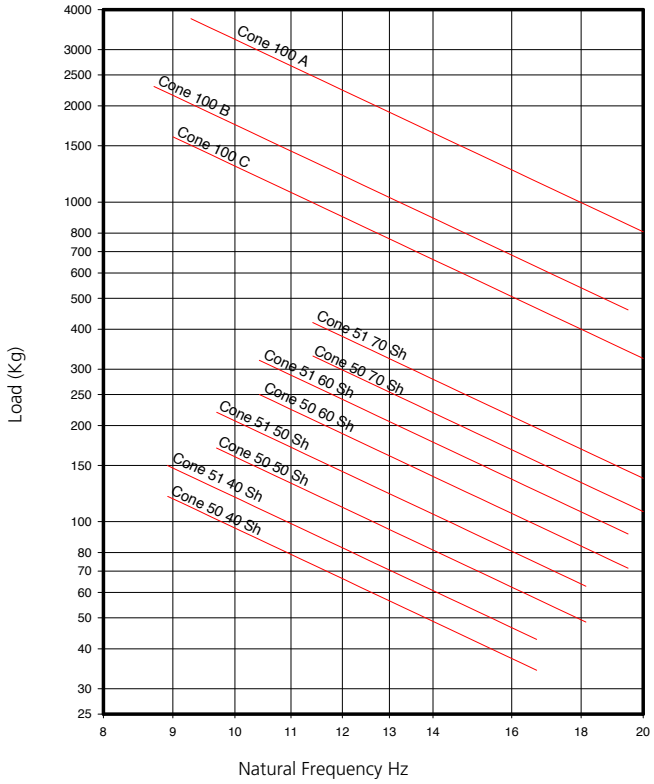

DEFLECTION CONE

AMC LOAD DEFLECTION GRAPHS
MECANOCAUCHO® CONE TYPE

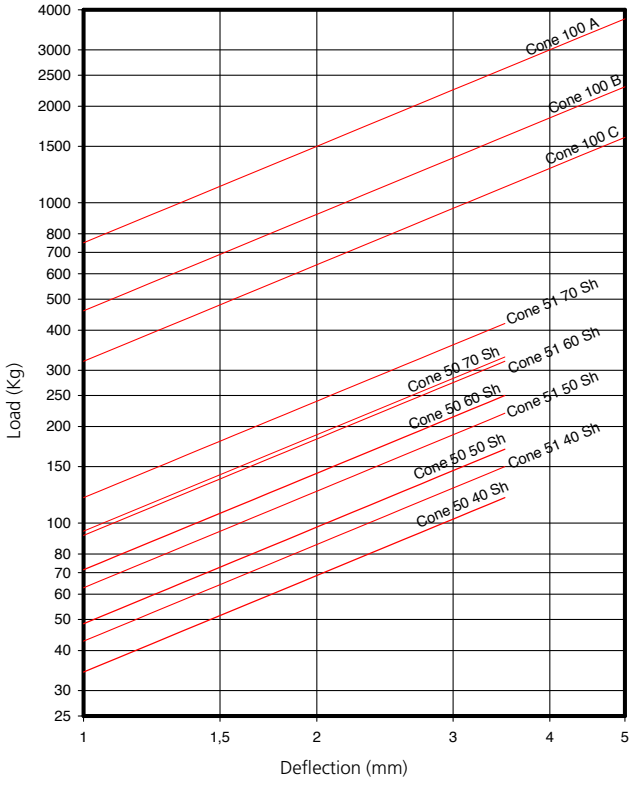

* In order to adapt its products to the state of the art, AMC .A. reserves the right to modify the conception and manufacture of the materials presented in this catalogue without prior notice